Thermal Leverage

O&M MANUAL

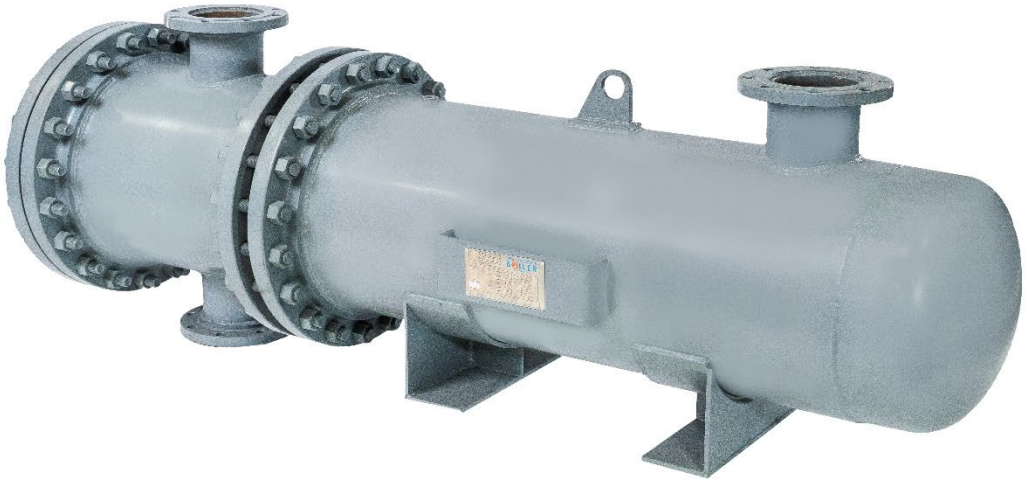

SHELL AND TUBE HEAT EXCHANGER INSTALLATION AND MAINTENANCE MANUAL

Installation

SITE SELECTION is the first step to ensure proper installation of Thermal Leverage shell and tube heat exchangers. It is important that the heat exchanger is easily accessible for inspection, maintenance, and cleaning. **Straight Tube** heat exchangers (removable bundles) allow for sufficient clearance at the stationary head end for removal of the bundle from the shell and provide adequate space beyond the rear head to accommodate removal of the shell cover and/or floating head cover.

Fixed Tubesheet heat exchangers provide sufficient clearance at one end for withdrawal and replacement of the tubes and enough space beyond the head at the opposite end to permit removal of the bonnet or channel cover.

U-Tube heat exchangers provide sufficient clearance at the stationary head end for withdrawal of the tube bundle, or at the opposite end to permit the removal of the shell.

FOUNDATIONS must be suffi ciently heavy as to provide permanent support without settling, and to absorb any normal vibrations from outside causes.

Most Thermal Leverage shells and tube heat exchangers are equipped with cradles for horizontal installation or brackets for vertical installation. If the supports are integral, the foundation bolts at the end opposing the channel should be loosened to allow free expansion and contraction of the shell.

The exchanger should be set level and square so pipe connections can be made without forcing to reduce the possibility of leaks during operation.

INSPECT all exchanger openings for foreign material before installation. The entire system should be clean before starting operation. Do not remove protective plugs and covers until just prior to installation.

Pieces of gaskets, metal chips, scale, and similar materials can plug tubes. To minimize the risk of blockage, take the following precautions:

- Use care in placing gaskets.
- Do not use valves with soft seats.
- Blow out pipelines before connecting to the unit.

FITTINGS AND PIPING are critical in the proper installation of Thermal Leverage shells and tube heat exchangers. To ensure the full rated capacity of the unit, it is important to select the proper pipe sizes. While pipe connections for average conditions are specified on certified drawings, further thought must be given to plant conditions – such as length of pipes, fittings, obstructions, and the allowable pressure drop through the heat exchanger.

By-Pass Valves should be provided in both circuits of the unit to permit periodic inspection or repair without interruption of the fluid flow.

STRAIGHT TUBE(AEW)

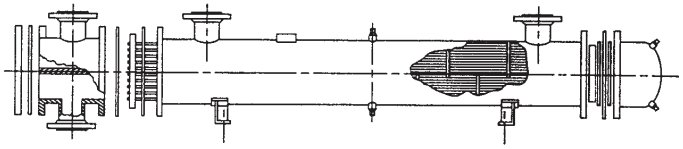

FIXED TUBESHEET(AEM)

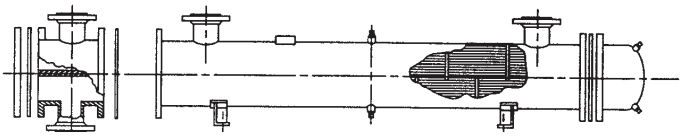

U-TUBE(AEU

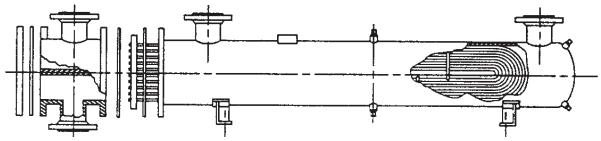

WARNING: DRESS SAFELY.

Make a list of all protective clothing and/or safety equipment recommended by the manufacturers of all items or equipment used in the installation. Follow all the safety practices and procedures outlined by each respective manufacturer.

Test Connections for thermometer well and pressure gauges should be installed close to the exchanger in the inlet and outlet piping, when not integral with the exchanger nozzles.

Inert Gas Vents should be provided to prevent gas binding of the heat transfer surface and a subsequent reduction in thermal capacity in condensing units.

Drain Piping must be suitable for discharge into the atmosphere (if permissible) or into a vessel at lower pressure. Do not pipe to a common closed manifold.

Fluid Pulsations and Mechanical Vibrations to heat exchangers must be minimized in all installations. Install surge drums when the liquid is being delivered to the unit by a reciprocating pump, as the vibration can cause serious damage to the tubes.

Gage Glasses in condensing units should be installed to show liquid level.

Safety Device Connections are provided when required on shells. To safeguard against failures or possible ruptures during operation, the unit must be protected with a safety relief valve or rupture disk of an approved type and make, set at the proper pressure. In the tube circuit, such devices should be placed in the inlet piping between the nearest valve and the unit.

EXTERNAL BOLTED JOINTS may require re-tightening in a uniform, diametrically staggered pattern, as illustrated below. Although all Thermal Leverage shell and tube heat exchangers are pressure tested before leaving our plants, normal relaxing of the gasketed joints may occur in the interval between testing and start-up.

Please reference the general arrangement drawing or contact the factory for proper torque values. The bolt tightening procedure should be as follows:

BOLT TIGHTENING PROCEDURE

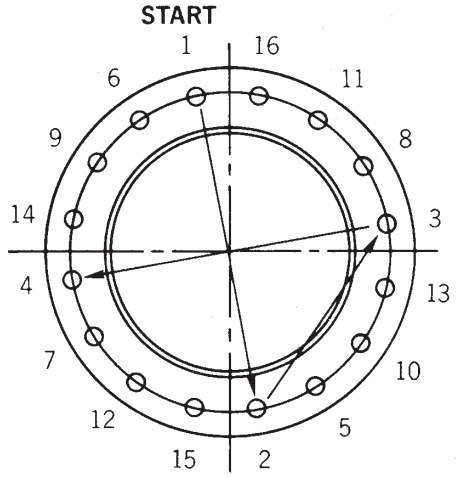

CAUTION:
Heat exchangers are pressure vessels. The stated operational pressures and temperatures should NOT be exceeded.

Operation

Operation procedures must be strictly followed in start-up and shutdown sequences, especially in fixed tubesheet units where improper start-up or shutdown may cause leaking of tube-to-tubesheet joints and/or bolted flanged joints. Heat exchangers should not be subjected to abrupt temperature fluctuations. Hot fluid must not be introduced when the unit is cold, nor cold fluid introduced when the unit is hot.

Equipment must not be operated at temperatures or pressures that exceed those listed on the nameplate. Flow rates must not exceed those indicated on the latest revision of the supplied TEMA data sheet.

START-UP

1. Check system for cleanliness to avoid plugging of tubes and pass partitions with refuse. Protective screens or strainers in piping to the heat exchanger are recommended.
2. Vent valves should be opened before fluid is admitted to heat exchanger.
3. Check all flange bolting for tightness.
4. Start flow of fluids gradually, introducing colder fluid first. When system is completely filled and all air vented, close vent valves.
5. When operating temperatures are reached, bolting and packed joints should be re-tightened to prevent leaks and gasket failures.
6. The heat exchanger should never be operated at pressures, temperatures, and flows in excess of those specified on the nameplate and design specification sheet.
7. For heat exchangers used in steam service, provision must be made to drain accumulated condensate prior to start-up.

THERMAL SHOCK
Extreme caution must be taken to avoid subjecting the heat exchanger to thermal shock, excessive pressures, and excessive temperatures. These conditions can impose stresses resulting in premature heat exchanger failure as well as damage to other components in the system.

SHUTDOWN
Most heat exchangers with removable tube bundles may be shut down by gradually reducing the flow of the hot medium and then the cold medium. Should it be necessary to stop the cold fluid first, then the hot medium should be stopped at once. For a fixed bundle heat exchanger, both mediums should be stopped in such a manner to minimize the differential thermal expansion between shell and tubes. By-pass piping may be incorporated for this purpose.

Maintenance

Typically, the failure of a heat exchanger to perform to specifications may be caused by one or more of the following factors: (1) excessive fouling, (2) air or gas binding resulting from improper piping installation or lack of suitable vents, (3) operating conditions differing from design conditions, (4) maldistribution of flow in the unit, and (5) excessive clearances between the baffles and shell and/or tubes due to corrosion.

Inspection of Thermal Leverage shell and tube heat exchangers at regular intervals, as frequently as experience indicates, can identify potential problems before any structural damage occurs. The inspection should include an examination of both the interior and the exterior of the unit.

Failure to keep all tubes clean can result in severe flow restrictions through some tubes, which could cause damaging thermal stresses, resulting in leaking tube joints or structural damage to other components.

Temperatures and pressures of the fluid entering and leaving the equipment should be checked regularly to evaluate the function of the unit. For example, an increase in the pressure drop across the unit, with an accompanying decrease in the temperature range, may indicate vapor or gas binding.

A slight sludge or scale coating on the tube greatly reduces the heat transfer efficiency. Therefore, exchangers subject to fouling or scaling should be cleaned periodically. A marked increase in pressure drop and/or reduction in performance usually indicates cleaning is necessary. The unit should first be checked for air or vapor entrapment to confirm that this is not the cause for the reduction in performance. Since the difficulty of cleaning increases rapidly as the scale thickness or deposit increases, the intervals between cleanings should not be excessive.

Disassembly and removal of the bundle for visual inspection and cleaning is desirable. The bundle must be checked for excessive corrosion. Regular inspection and cleaning are highly recommended when the fluids handled are fouling or highly corrosive.

CAUTION!:

Before disassembly, the user must ensure that the unit has been completely shut down and depressurized, vented, drained, and neutralized and/or purged of hazardous material.

Care must be taken when handling the fouling material and the cleaning agent. Follow the chemical's handling instructions and wear all forms of eye, respiratory, and body protection recommended.

TUBE JOINT LEAKS can be located with the following procedures:

Fixed Tubesheet Exchangers – Remove the channel covers and apply pressure on the shell side.

Floating Tubesheet Exchangers – Remove the front channel cover and apply pressure on the shell side. Any leaks between the tubes and the front tubesheet will be evident immediately. Should a major leak occur in the rear tubesheet, the fluid will shortly be seen running out of the bottom row of tubes. Minor leaks may require the removal of the tube bundle and the application of a pressure test on individual tubes.

U-Tube Exchangers – Remove the bonnet or channel cover and test from the shell side. Be sure that all bolted contact surfaces are secured with all bolts in place and properly tightened.

Removal of the tube bundle requires the joint first be broken with a chisel, being careful not to damage the gasket surface, and then pulled or pried out.

Where the resistance to remove the bundle is great, a pair of hydraulic jacks placed diametrically opposite on the periphery of the tubesheet may be employed.

To remove a straight tube/floating tubesheet bundle, either of the above methods may be used or one of the following:

- Cables straps or chains may be attached to eyebolts screwed into the tubesheet.

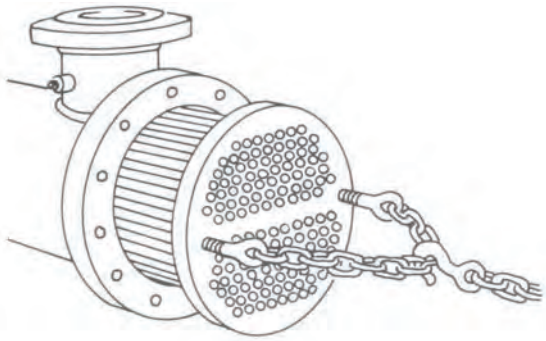

- Cables may be threaded through several tubes (tube diameter permitting) and pulled. The cable must be passed over a wooden block at the tube ends to protect such tube ends from damage.

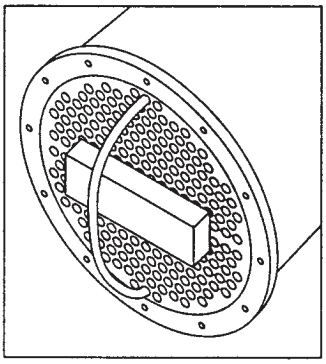

The bundle should be supported on the tube baffles, supports, or tubesheets to prevent damage to the tubes. The gasket and packing contact surfaces should be protected.

Tube Expanding – A suitable tube expander can be used to seal a leaking tube joint; however, care should be taken to insure that tubes are not overexpanded. Proper care should be taken to prevent expanding the tube beyond the backside of the tubesheet.

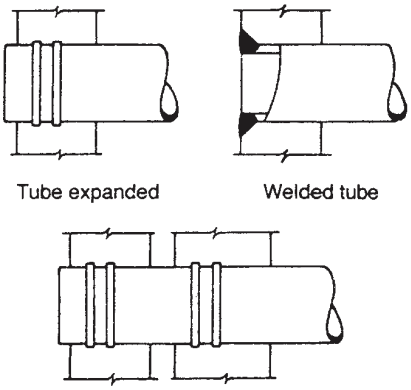

CAUTION!:
When removing the tube bundle . . .

- Do not exceed stated load capacities of any piece of equipment or tools used.
- Wear all recommended protective clothing and follow all other safety practices.

Cleaning of Thermal Leverage shells and tube heat exchangers is important to assure the equipment provides satisfactory performance. Heat transfer equipment may be cleaned by either chemical or mechanical methods. The method selected must be the choice of the operator of the plant and will depend on the type of deposit and the facilities available in the plant. These are suggested methods:

PROBLEM	SOLUTION
Water-soluble deposits	Flush with warm water.
Soft, water-insoluble deposits	Circulate hot wash oil or light distillate through the tube and shell at a high velocity, followed by thorough rinsing.
Sludges or cokes	If neither of the methods described above produce satisfactory results, try chemical cleaning solutions such as Oakite.®
Hard scale	Should the scale not yield to the treatments mentioned above, then a chemical analysis of the scale is advisable. Such an analysis may indicate that careful washing with a dilute mineral acid and inhibitor, followed by thorough washing, will provide the required results. A mechanical cleaner, preferably a wire brush, can advantageously be employed, but care should be taken to prevent the cutting or scoring of the tube wall.

CAUTION!: CLEANING PRECAUTIONS

- Be careful to avoid damaging the tubes when mechanically cleaning a tube bundle.
- Cleaning compounds must be compatible with the metallurgy of the exchanger.

DO NOT:

- Introduce steam into an individual tube, as this can cause differential expansion stresses, with possible leakage at the tube joints.
- Introduce air into units handling inflammable or volatile liquids.

WARNING!:

Substances used in and to clean the heat exchangers are HAZARDOUS chemicals! Follow all local, state, and federal ordinances in the removal and disposal of these substances.

Frequent cleaning is important to prevent excessive deposits on the tubes, since these deposits may result in plugging of the tubes. Resultant overheating may be followed by leakage of the expanded joints or result in other damage and a reduction in thermal capacity.

RE-ROLLING LOOSE TUBE JOINT

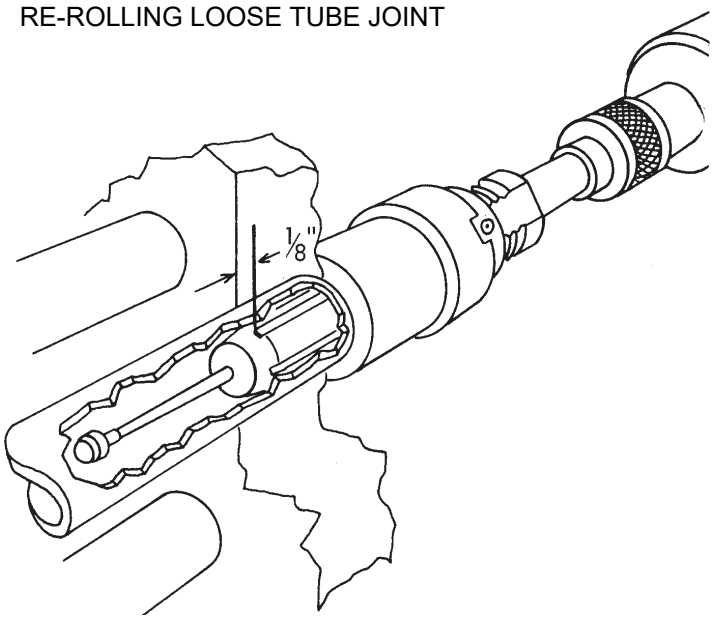

NOTE:
When using a mechanical tube expander, set the depth control collar to assure at least 1/8 in. between the expansion roller end and the inside of the tubesheet.

Gaskets and gasket surfaces should be thoroughly cleaned and should be free of scratches and other defects. Gaskets should be properly positioned before attempting to re-tighten bolts. It is required that, when a heat exchanger is dismantled for any cause, it be reassembled with new gaskets. This will tend to prevent future leaks and/or damage to the gasket seating surfaces of the heat exchanger. Composition gaskets become dried out and brittle so that they do not always provide an effective seal when reused. Metal or metal-jacketed gaskets, when compressed initially, flow to match their contact surfaces. In so doing, they are work hardened and, if reused, may provide an imperfect seal or result in deformation and damage to the gasket contact surfaces of the exchangers.

Bolted joints and flanges are designed for use with the particular type of gasket specified. Substitution of a gasket of different construction or improper dimensions may result in leakage and damage to gasket surfaces. Therefore, any gasket substitutions should be of compatible design.

Any leakage at a gasketed joint should be rectified and not permitted to persist as it may result in damage to the gasket surfaces and void the warranty.

Metal-jacketed type gaskets are widely used. When these are used with a tongue-and-groove joint without a nubbin, the gasket should be installed so that the tongue bears on the seamless side of the gasket jacket. When a nubbin is used, the nubbin should bear on the seamless side.

Spare and Replacement Parts can be ordered directly from API Heat Transfer. When ordering parts, please provide the name of the part needed, as well as the serial number, type, and size from the nameplate on the unit.

Special Notes on Type OP (TEMA Type AEW/BEW) Heat Exchangers

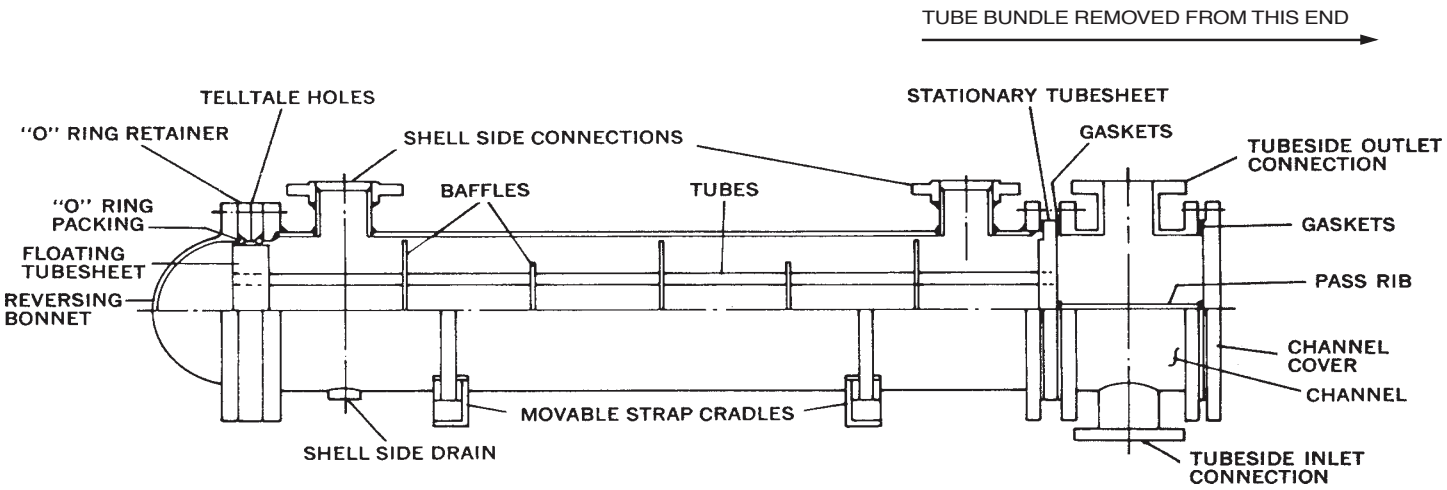

Thermal Leverage Exclusive Double "O" Ring Seal Protection

Thermal Leverage exclusive double "O" ring seal protection permits tube bundles to expand and contract without harmful strain or intermixing of shell and tube side fluids. "O" rings retain compression without adjustment and are unaffected by vibration and temperature changes. No danger of over-tightening. Telltale holes reveal any leakage.

DETAIL OF FLOATING END

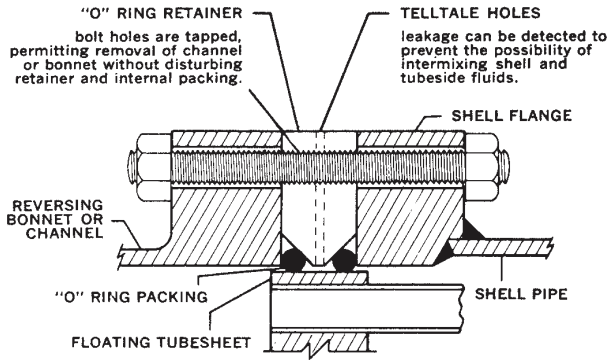

TO REPLACE "0" RING PACKING	SHELL SIDE TEST PROCEDURE
1. Remove bonnet or channel at floating tubesheet end.	1. Remove channel cover at stationary tubesheet end leaving channel bolted to shell.
2. Remove existing "O" rings and "O" ring retainer.	2. When a bonnet is used at the stationary end in place of a channel, the bonnet can be removed and a test ring substituted to tighten shell and tubesheet gasket.
3. Clean sealing surfaces including O.D. of floating tubesheet.	3. Remove bonnet or channel at floating tubesheet end.
4. Assemble inner (shell side) "O" ring.	4. The bolting that is threaded into the retainer ring will hold shell side pressure during hydrostatic test.
5. Assemble retainer ring and tighten to shell flange using the bolting that is threaded in the ring.	5. Tube side may be examined with shell pressurized and without draining shell side fluid.
6. Assemble outer (tube side) "O" ring.	
7. Replace floating head bonnet or channel.	